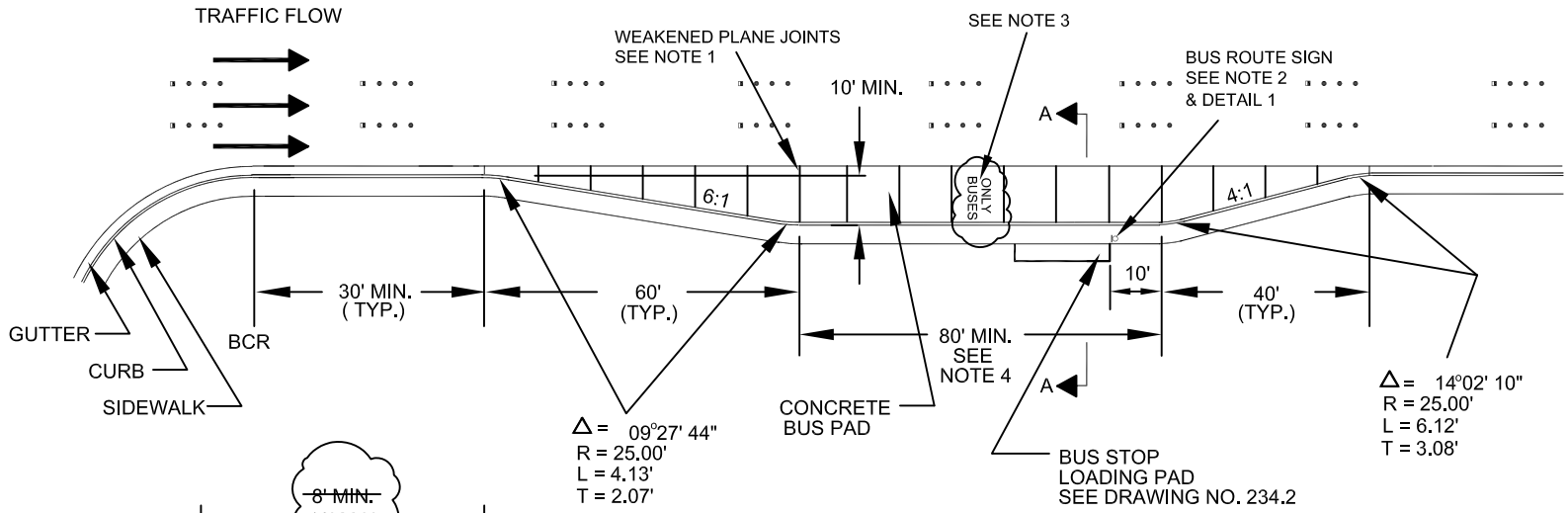

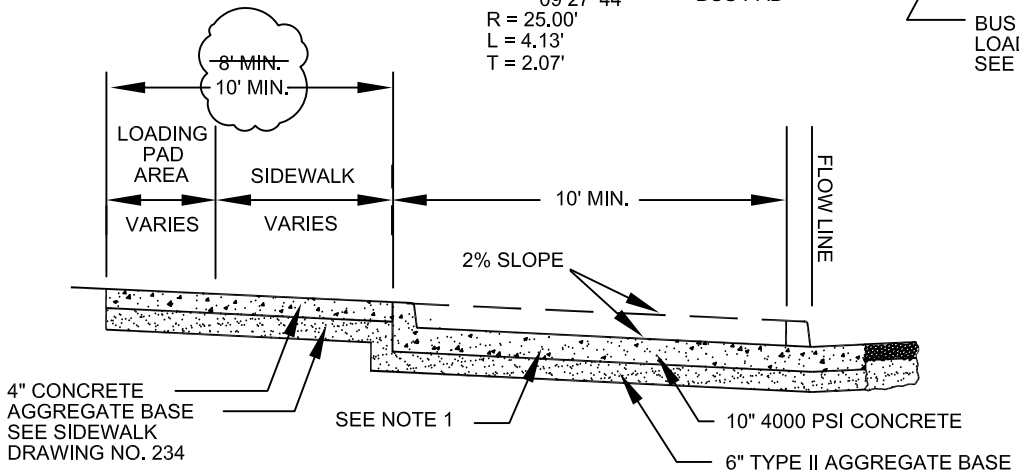

SECTION A-A

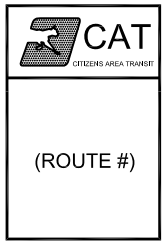

DETAIL 1
BUS ROUTE
SIGN

NOTES:

1. CONCRETE BUS PAD SHALL BE MONOLITHIC. TRANSVERSE WEAKENED PLANE JOINTS SHALL BE INSTALLED AT 10' INTERVALS AND AS DETAILED IN STANDARD DRAWING NO. 233, TYPE "C".
2. BUS ROUTE SIGN SHALL BE INSTALLED AT THE DOWNSTREAM END OF BUS STOP LOADING PAD.
3. A MINIMUM OF ONE SET OF PAVEMENT MARKINGS CONTAINING THE "BUSES ONLY" SYMBOL SHALL BE PLACED IN THE TURN-OUT AREA. EXACT LOCATION TO BE DETERMINED BY THE ENGINEER.
4. ADDITIONAL STORAGE AREA WILL BE REQUIRED WHEN MORE THAN ONE BUS IS EXPECTED TO OCCUPY THE TURN-OUT AT THE SAME TIME.
5. ALTERNATE CONCRETE AND BASE THICKNESSES MAY BE SUBSTITUTED, BUT MUST BE SUPPORTED BY ENGINEERING ANALYSIS AND APPROVED BY THE ENGINEER.
6. TURN-OUT SURFACE SHALL BE TEXTURED IN ACCORDANCE WITH UNIFORM STANDARD SPECIFICATION NO. 409.03.08. FLOW LINE SHALL NOT BE TEXTURED, BUT SHALL BE A TROWELED SURFACE.

SPECIFICATION REFERENCE	
302	AGGREGATE BASE
501	CONCRETE
502	CONCRETE STRUCTURES

UNIFORM STANDARD DRAWINGS
CLARK COUNTY AREA

TYPICAL BUS TURN-OUT

DATE	DWG. NO.	PAGE
	234.1	40.1